D25500K Motor HAMMER 3

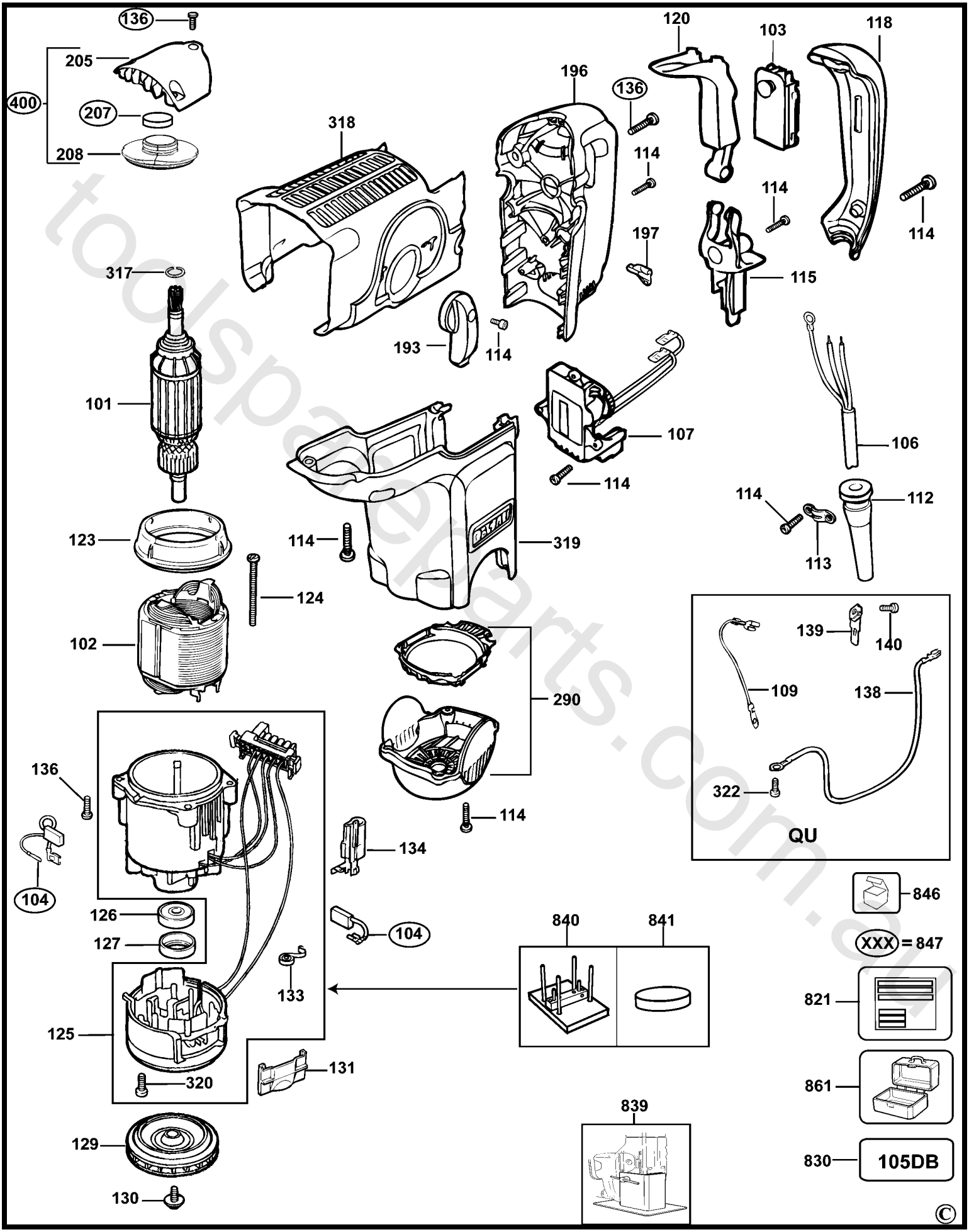

toolspareparts.com.au